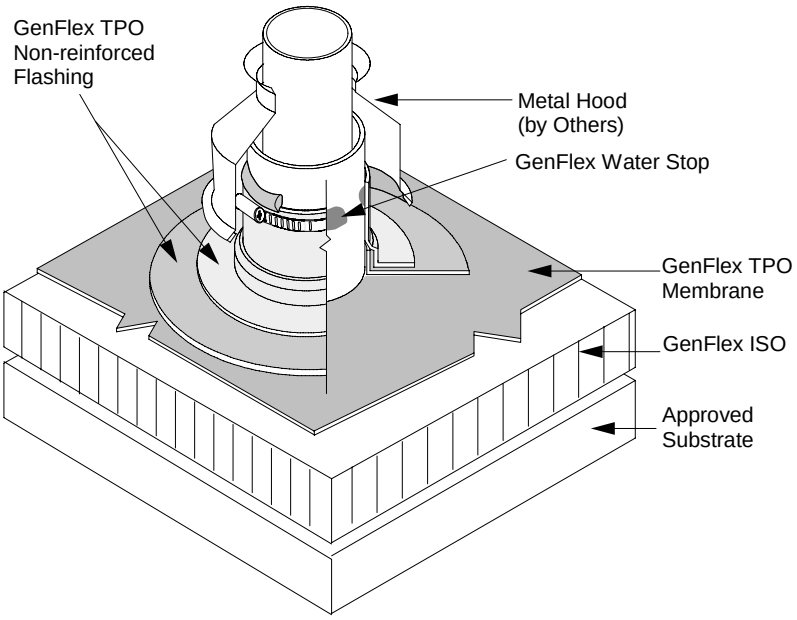

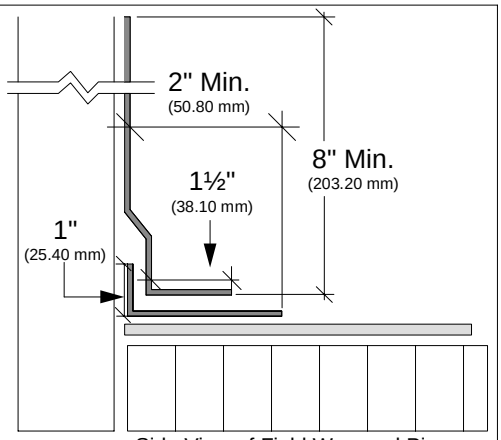

Side View of Field Wrapped Pipe

Base wrap to extend 1" Min. (25.40 mm) up vertical surface of pipe and 2" Min. (50.80 mm) onto field membrane, with a solid hot air weld to the deck membrane.

Upper wrap to extend 1½" (38.10 mm) onto base wrap and 8" Min. (203.20 mm) up pipe and sealed into a bead of GenFlex Water Stop with a stainless steel compression band.

Refer to Detail T-7.02 for pipe wrap requirements and Detail T-7.01 for membrane securement requirements. Hood must be secured and sealed to hot pipe and fabricated so as to shed water and protect opening in roof system.

GenFlex Roofing Systems

10/06

Hot Pipe Flashing	**Detail #: T-7.03**	**TPO Systems**